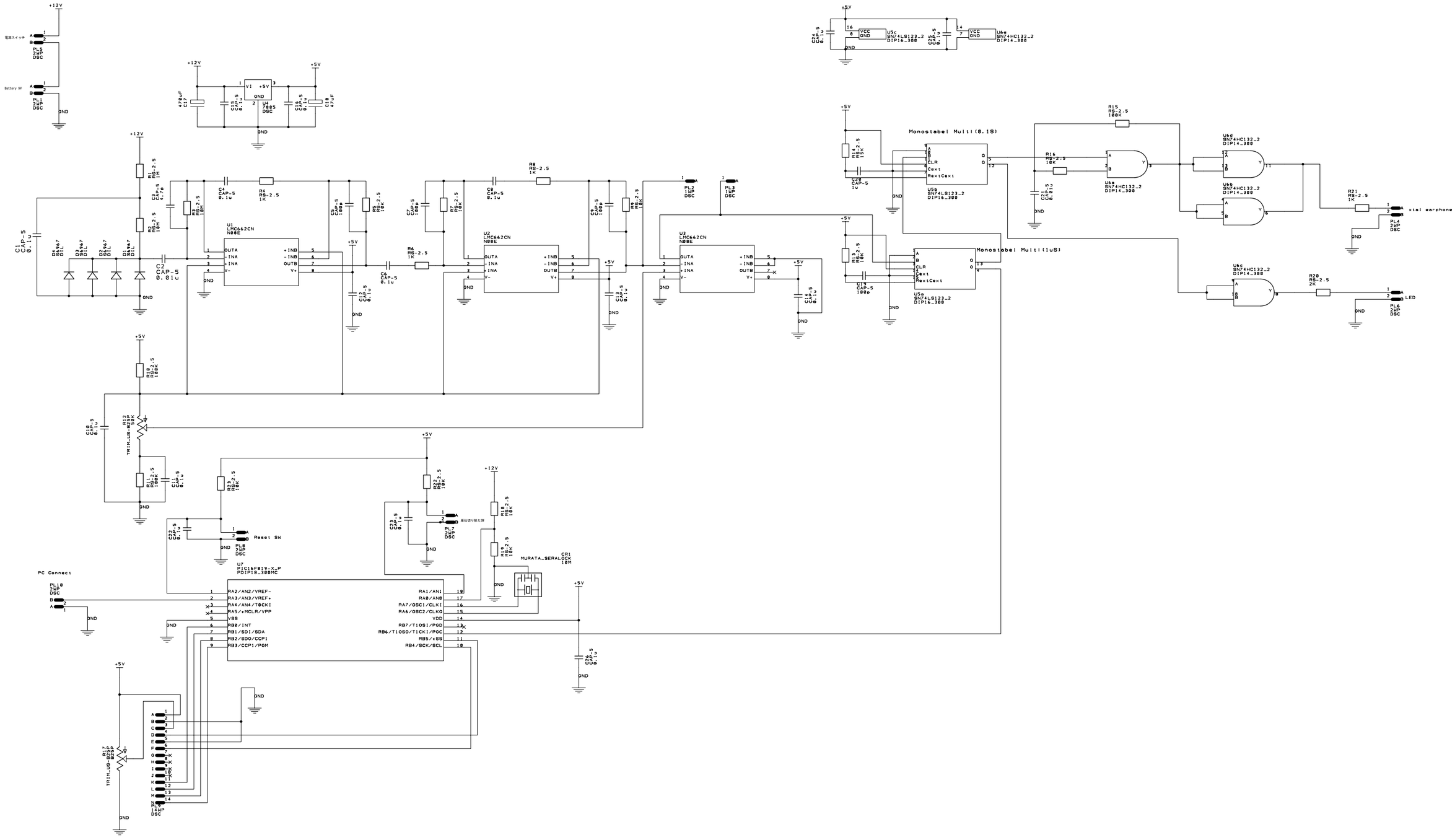

E	D	C	B	A	Drawn	Check	Projection Do Not Scale	
Drn	Drn	Drn	Drn	Project			Client	
Chk	Chk	Chk	Chk	Title			Filename	Drawing No.	Sheet of

Gamma-Photon Counter